Alternative Method:

1. Remove the fan-bracket-rotor assembly from the motor.
2. Solidly support the end bracket and press the shaft out of the blower with an arbor press or a drift and mallet.

Do not attempt to remove these blowers from the shaft by direct application of a wheel puller to the blower. To do so may damage the blower.

Blower Assembly with Tolerance Ring

Tolerance ring (S18044 series part) is used to retain blower on shaft. During assembly the tolerance ring must be fully seated in its final position in the blower hub bore. If the tolerance ring is partially inserted into the bore, it may be permanently deformed and lose its maximum retention capability.

TERMINAL BOX INSTALLATION INSTRUCTIONS

56H-256T ODP and 56-145T TEFC

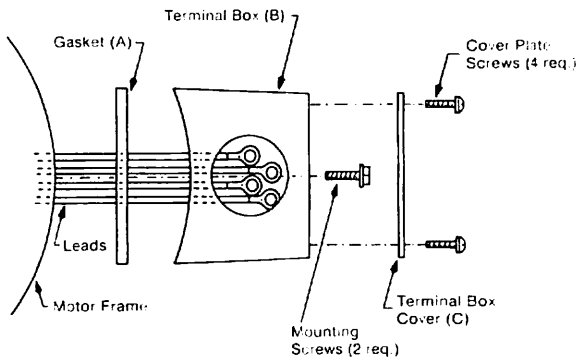

1. Take the two mounting screws and run them in their respective holes to clear out any excess paint; then back out. Note these screws have self-tapping threads. Leave the screw closest to the lead bundle engaged in the motor frame but backed out as far as possible.
2. Place the gasket (A) and the terminal box (B) in position on the motor frame with the conduit knock-out in the desired location. The box can be rotated to allow for power entry from the 3, 6, 9 and 12 o'clock positions.
3. Install the second mounting screw and tighten both screws.
4. Install the input power leads and conduit. Connect the motor leads to the power leads per the motor nameplate or the appropriate connection diagram in this manual and then insulate and tape. Ground the motor per the U.S. National Electrical Code using the hole identified by the ground symbol (⏚) in the frame shell located within the confines of the installed terminal box (B) and the green colored screw provided. On frames 56-184T a cup washer is utilized for the grounding wire retainer; a ring terminal on frames 213T-256T.
5. After insulating and taping the leads, place the cover (C) on the terminal box (B).
6. Install and tighten the four cover plate screws.
7. When properly installed, the mating fit of the box and cover provide a leakproof seal.

56 ODP

These motors have the terminal housing built into the rear end bracket of the motor. The motor leads extend into this housing and are accessible by the removable cover plate. The conduit entry hole is threaded. Grounding is accomplished by means of a green thread rolling screw which threads into a corner boss within the terminal housing. The grounding wire is retained by a brass cup washer.

ELECTRICAL CONNECTIONS

Connection To Power Supply

Proper branch circuit supply to a motor should include a disconnect switch, short circuit current fuse or breaker protection, motor starter (controller) with overload relay protection.

Short circuit current fuses or breakers are for the protection of the branch circuit. Starter or controller overload relays are for the protection of the motor.

Each of these should be properly sized and installed per the U.S. National Electrical Code and local codes.

Unless specifically exempted by the U.S. NEC or local codes, ground the motor as specified in the codes. See "Terminal Box Mounting Instructions" for information on grounding provisions.

⚠ WARNING

Motor lead connections can short and cause damage or injury if not well secured and insulated.

- **Use connection devices, methods and insulation materials which have been established as being reliable and safe.**
- **Insulate each connection using insulation equal to or better than that on the supply leads.**

Motors Wound For 60 Hz Power Systems

Standard winding voltages include 230/460, 200/400 and 575. These motors are wye connected and are suitable for across-the-line and autotransformer start. They should be applied per the table. Other reduced voltage starting methods require a special winding.

NEMA Motor Rated Voltage (Nameplate)	Satisfactory Operating Voltage Range[1] (at rated frequency)	Nominal System Voltage
200	180-220	208
230	207-253	240
460	414-506	480
575	518-633	600

[1] See Lincoln Bulletin B2T for system voltage standards.

For dual voltage (230/460 or 200/400) motors, proper connection of the motor leads for each voltage is shown on the motor nameplate and Diagram 1. For example; "LOW VOLTAGE LINE" is the wiring for the lower of the possible input voltages listed on the nameplate. Each motor lead is imprint numbered its full length for convenience; the number on the lead corresponds to the number on the connection diagram.

The nameplate also reports the 208 volt capability of motors wound for 230/460. However, the motor's performance may not meet all NEMA limits (starting torque and amps, slip) when operated on 208 volt systems. Lower voltage causes the running amps for any load condition to increase, raising the motor's temperature and rate of insulation degradation and perhaps shortening motor life. Reducing the load, increasing the system voltage, oversizing the motor or purchasing a motor with a 200/400 volt winding are solutions for low voltage. Follow the "LOW VOLTAGE LINE" connection diagram when operating a motor wound for 230/460 on 208.

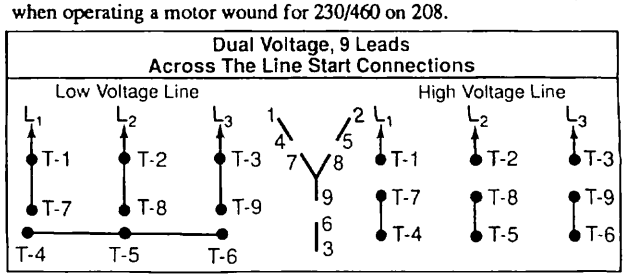

Diagram #1– 60 Hertz

Standard 230/460 volt 60 Hertz motors may be operated from 190 to 220 volts 50 Hertz when connected for 230; the 460 volt connection can accept 380 to 440 volts 50 Hertz. Derate motor horsepower to 90% of the nameplate value with a service factor of 1.0. Keep in mind the motor speed decreases to 83% of nameplated speed. A small derate sticker, #T11590-43, is available at no charge from Lincoln to affix to the motor.

Motors Wound For 50 Hz Power Systems

Standard winding voltages with 6 leads include 220/380, 230/400 and 240/415; those with 9 leads are 200/400 and 220/440. Connect 6 lead motors per Diagram 2; 9 lead motors per Diagram 1. Note the 220/380, 230/400 and 240/415 windings are suitable for Y-Delta start on only the lower voltage (220, 230, 240). Follow Diagram 4 under "Motors With Non-Standard Options" for this starting method. If Y-Delta starting is required on 380, 400, 415 or 440 volts, a motor with a special winding is necessary.

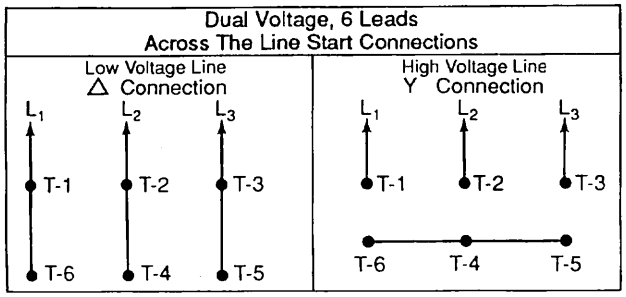

Diagram #2 – 50 Hertz

Motors With Non-Standard Options

Larger horsepower motors can be wound for Part-Winding Start (PWS) or Y-Delta Start (YDS) when special ordered. To use the motor's PWS or YDS capability, connect the motors leads per the following diagrams to the appropriate reduced voltage starter.

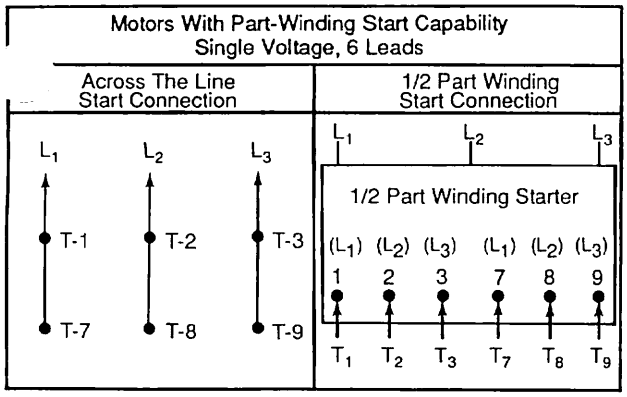

Diagram #3 – 60 Hertz

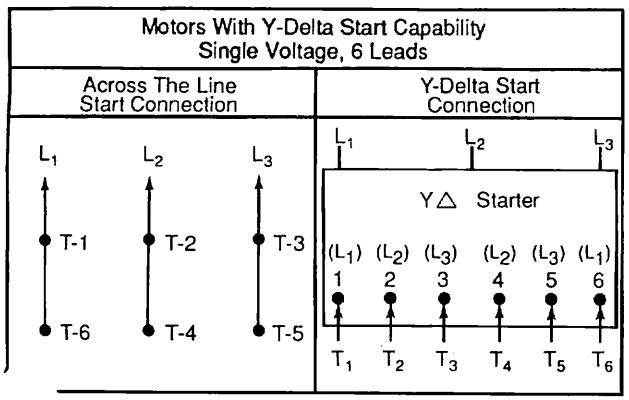

Diagram #4 – 50/60 Hertz

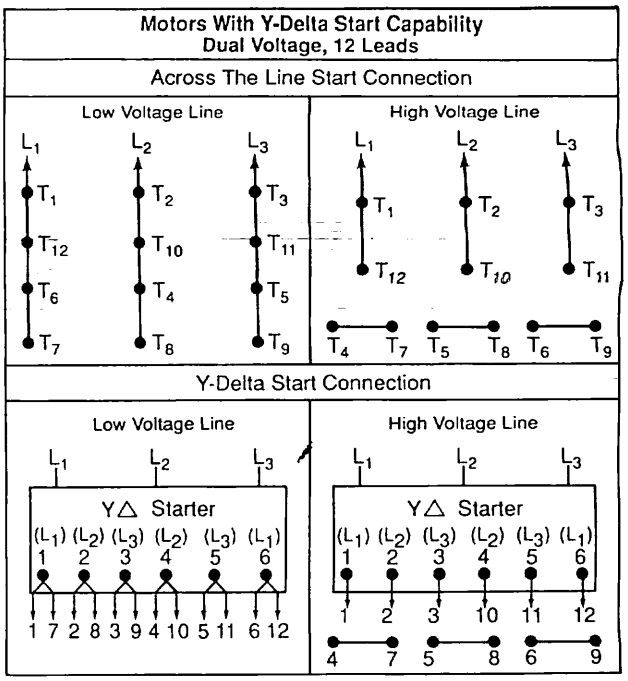

Diagram #5 – 60 Hertz

Some motors may be equipped with space heaters or thermal overload protection such as thermostats and thermistors. Leads for these options are brought out with the motor leads; they are labeled H1/H2 for space heaters and P1/P2 for thermal overload protections. A special motor control system is needed to properly operate these options. If installed, the name of the option will be listed on the motor nameplate.

Overload Relays and Trip Time

The National Electrical Code specifies an overload relay in each phase of the three phase power supply to protect the motor against excessive input current caused by the following:

Overloading – Overloading a motor causes excessive input current which increases motor temperature, shortens stator life and can cause an overload burnout.

Voltage Variation (From Nameplate) – Excessively high voltage increases idle current by 25 to 50%. Excessively low voltage increases load current by 10% or more.

Voltage Unbalance (Between Phases) – A voltage unbalance of 3.5% can result in a current unbalance and temperature increase of 25%.

Single Phasing – Single phased motors will not start since they develop no torque and draw high current. When single phased under load, the motor will continue to run at a lower speed and draw approximately double the load current.

Overload relays should be sized per the instructions of the starter manufacturer. In general, sizing of overload relays is based on a percent of motor nameplate full load current depending on the type of starter.

Under normal conditions, overload relays provide protection between 110 and 120% of their current rating. No extra allowance for service factor is necessary.

For across the line starting, the trip time for properly sized overload relays should be approximately 15 seconds under locked rotor current conditions of 600% full load current. If the starting time goes beyond 15 seconds, the overload relay should disconnect the motor from the line to prevent motor stator overload burnout.

Oversizing the overload relay is NOT the way to eliminate excessive tripping. Eliminating excessive voltage drop, reducing starting time and properly sizing the motor are correct answers.