The BG Brake Rectifier - Standard for frame sizes up to 100, not available on frame sizes above 100

The brake rectifier BG is a half-wave rectifier with overvoltage protection.

This rectifier is used on small motors if no special requirements are needed with respect to the release reaction times of the brake. It cannot be used at elevated ambient temperatures or with unfavorable cooling conditions for the brake.

BG Normal Reaction Time

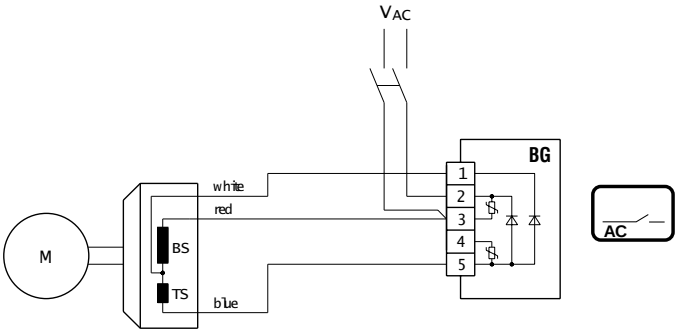

BG Rapid Reaction Time

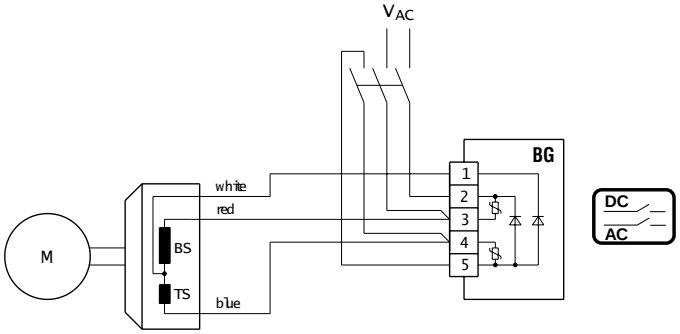

The BGE Brake Rectifier - Standard for motor frame sizes 112M and larger, optional on frame sizes 71 to 100

The BGE brake rectifier is a half-wave rectifier with over-voltage protection elements and electronic control for reducing the brake release reaction times.

The brake operation is improved by the BGE rectifier in that it releases the brake initially by super-magnetization and then holds the stationary disc securely with reduced magnetization. Due to the exceedingly reduced brake release reaction time t_1 the brake is released before the motor can build up torque and begin to rotate. Minimum wear with maximum service life and excellent switching ability are the outstanding features of the brake system.

In the continuous released state the current losses are reduced to the necessary minimum so the thermal loading of the brake is very low.

The use of the BGE Brake Rectifier is recommended if:

- Short brake release reaction times are required.
- High starting frequencies are encountered.
- High ambient temperature is present or the brake is required to be in the continuous released state while the motor is at rest or operating at low speeds.

BGE Normal Reaction Time

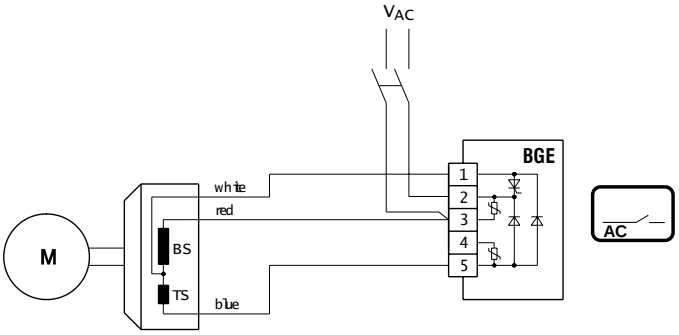

BGE Rapid Reaction Time

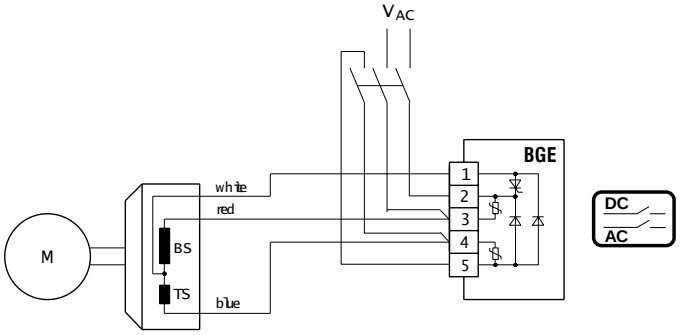

The BSG Brake Control Unit - Standard for motor frame sizes 112M and larger, optional on frame sizes 71 to 100

For 24VDC power supply to the brake the control unit BSG is available. With this control unit the same brake release reaction times as with the brake rectifier BGE are attained. If no BSG brake control system is installed a customer provided overvoltage protection must be provided.

BSG Rapid Reaction Time

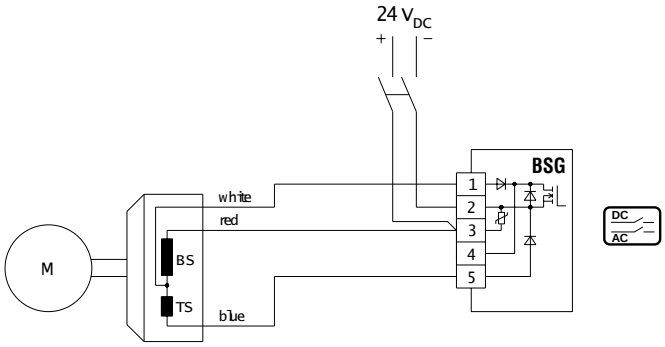

The BMH Brake Rectifier - Optional for frame sizes 71 to 225

For low ambient temperatures the BMH Brake Rectifier with a heating current is available for heating the brake while the motor is at rest. Electric heating is always recommended where moisture condensation followed by frost may occur or where wet corrosive atmosphere with long periods of rest are to be expected. The BMH unit has the same electronic circuitry as the BGE and thus provides the same short reaction times for the BM(G) brake.

The BMH is designed as a module in a DIN rail housing with plug-in connections for control cabinet installation.

BMH Normal Reaction Time

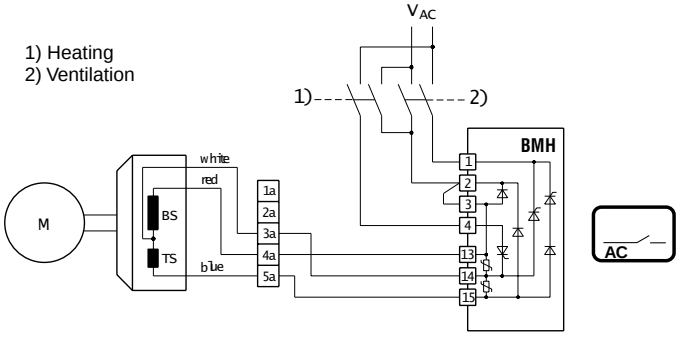

BMH Rapid Reaction Time

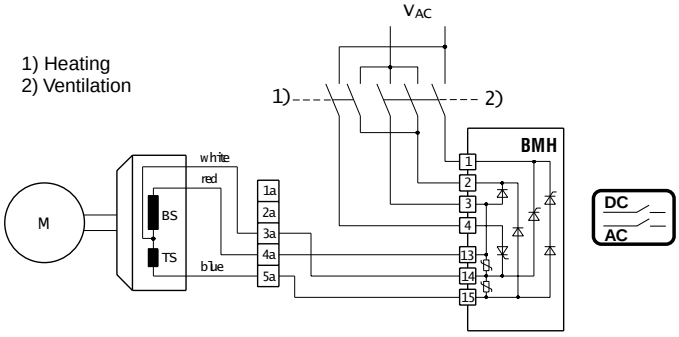

The BMS Brake Rectifier - Optional for frame sizes up to 100, not available on frame sizes above 100

The brake rectifier BMS is a half-wave rectifier with protective elements against overvoltage. It functions like the rectifier type BG, however, it is designed to be mounted in a control panel on DIN rail and not in the motors conduit box. The BMS can be wired to operate for normal or rapid brake reaction times. The BMS rectifier is primarily used when the ambient conditions of the motor preclude the use of the BG rectifier mounted in the motors terminal box.

BMS Normal Reaction Time

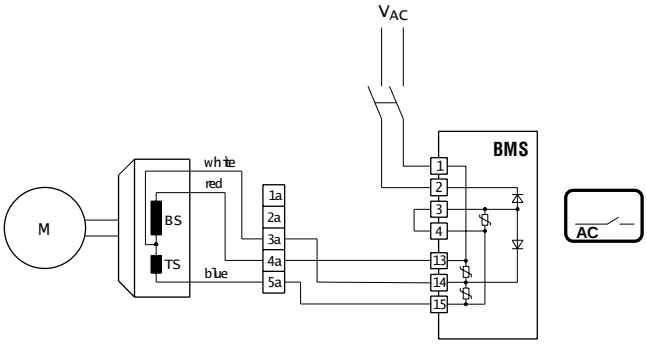

BMS Rapid Reaction Time

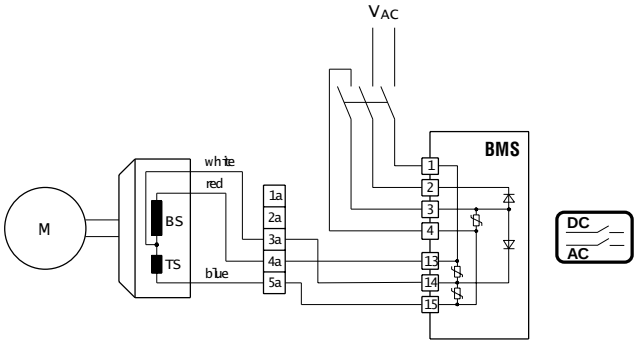

The BME Brake Rectifier - Optional for frame sizes 71 to 225

The BME brake rectifier is a half-wave rectifier with overvoltage protection elements and electronic control for reducing the brake release reaction times. It functions like the rectifier type BGE, however, it is designed to be mounted in a control panel on DIN rail and not in the motors conduit box. The BME has the same high performance functions as the BGE for rapid brake release, which allow the motor brake system to cycle at a very high rate. The BME can we wired to operate for normal or rapid brake reaction times. The BME is primarily used when the ambient conditions of the motor preclude the use of the BGE rectifier mounted in the motors terminal box.

BME Normal Reaction Time

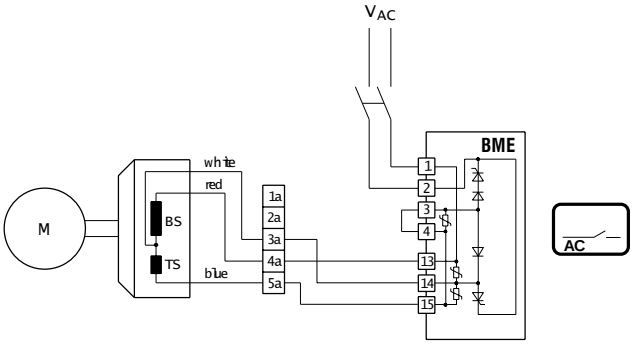

BME Rapid Reaction Time

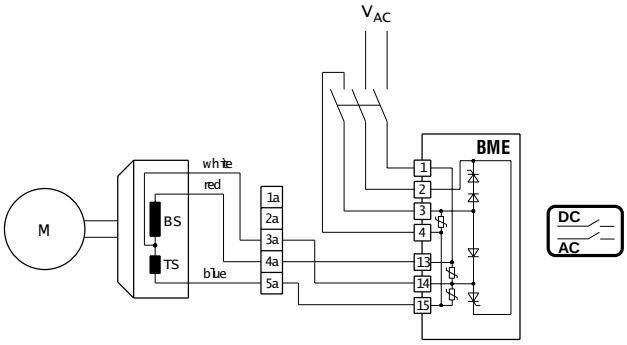

The BMP Brake Control System - Optional for frame sizes 71 to 225

The BMP control system is a BME brake rectifier with an integrated voltage relay. The BMP minimizes response and reaction times and reduces cabling between the switch cabinet and the brake motor. It functions like the rectifier type BGE and the voltage relay UR combined into one device. It is designed to be mounted in a control panel on DIN rail and not in the motors conduit box. The BMP has the same high performance functions as the BGE for fast rake release, which allow the motor brake system to cycle at a very high rate. The BMP rectifier will automatically provide the fast brake reaction function of the UR relay without the requirement of external wiring.

BMP Normal Reaction Time

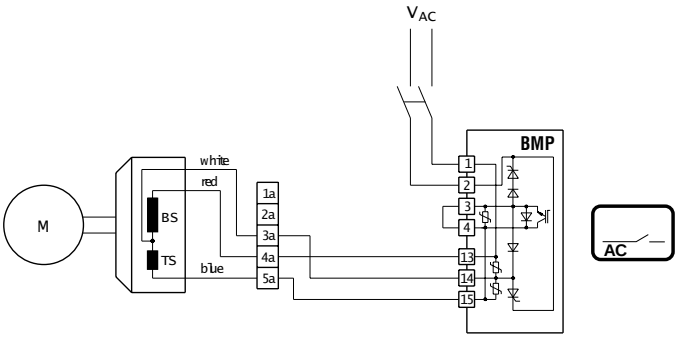

BMP Rapid Reaction Time

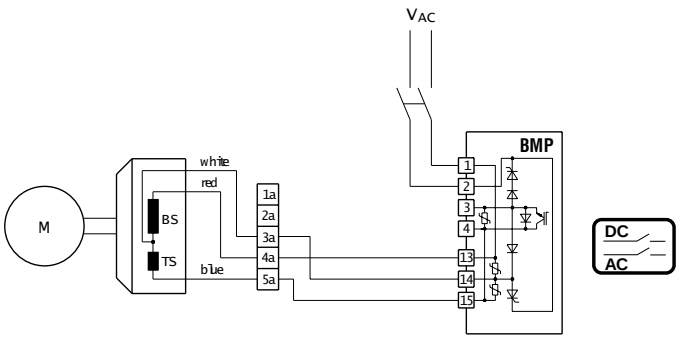

The BMK Brake Control System - Optional for frame sizes 71 to 225

The BMK rectifier functions like the rectifier type BGE, however, it is controlled directly by a $24V_{DC}$ control signal. The BMK is powered with the required AC supply voltage to operate the brake but the brake release is controlled by a $24V_{DC}$ control signal. It is designed to be mounted in a control panel on DIN rail and not in the motors conduit box.

Benefits:

- Direct control using $24V_{DC}$ output signal from a PLC
- Direct control of the brake from an inverter (MOVITRAC®, MOVIDRIVE®, MOVIDYN®) output signal
- Eliminates the need for a brake control brake power contact in most PLC and inverter installations

The BMK has the same high performance functions as the BGE for fast brake release, which allow the motor brake system to cycle at a very high rate.

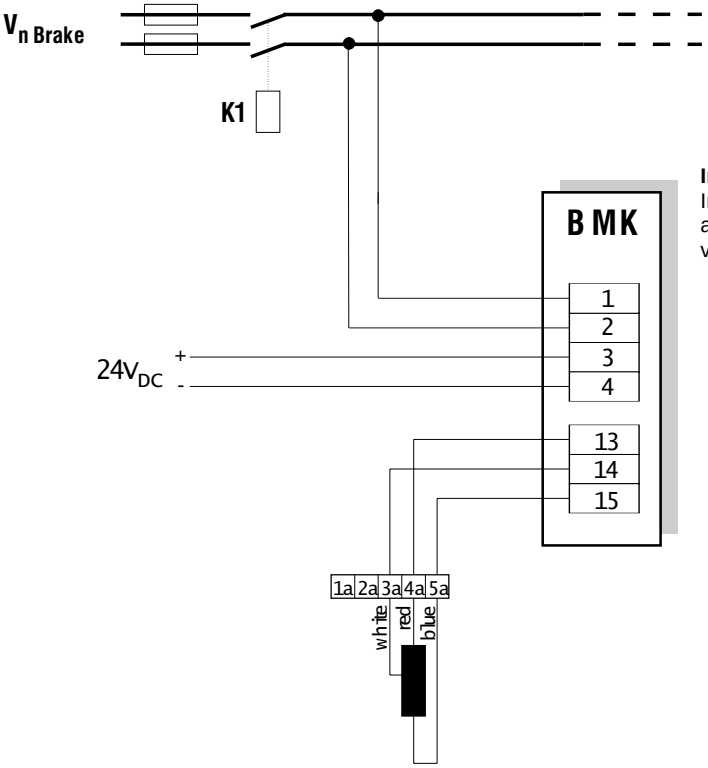

Important:
In the case of an EMERGENCY stop, an all-pole disconnection of the supply voltage is absolutely necessary!

The BSR Brake Control System

The BSR control system achieves the shortest brake reaction and brake release reaction times without any external control equipment or additional wiring leads. The BSR brake control system combines the brake rectifier BGE (for motor frame sizes 71 to 225) with an electronic, current relay SR, which is mounted in the terminal box. The SR takes care of the task of rapidly demagnetizing the brake.

The SR current relay is fed with current from a voltage phase feeding the motor while the motor is running. When the motor is switched off, the current relay, SR, switches instantly to cause the rectifier to demagnetize the brake.

The BSR system is only suitable for single speed motors with current ratings up to 50 Amps.

In general, the white-black leads of the SR relay replace a brass jumper bar on the terminal block of any single speed motor

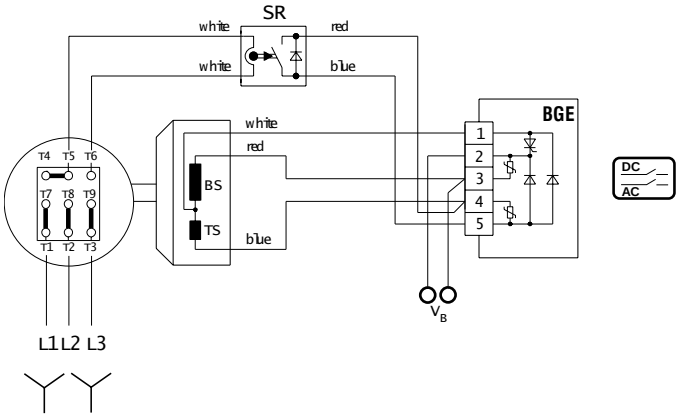

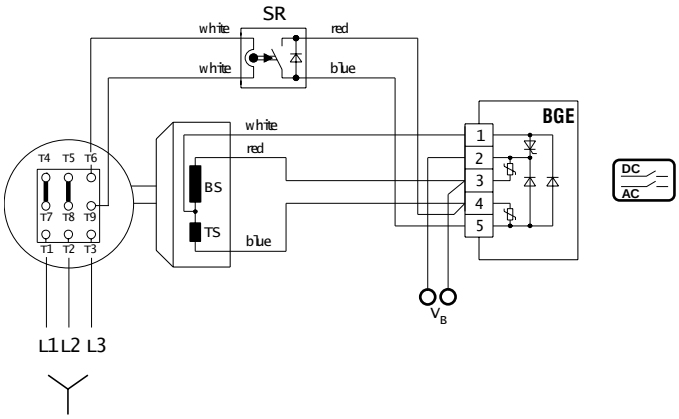

The BUR Brake Actuator

The control system BUR is an integrated combination, in the terminal box, of the brake rectifier BGE (for motor frame sizes 71 through 200), BG (for motor frame size 63) and the voltage relay UR. It is specially suited for two-speed or speed controlled AC squirrel-cage motors or DC motors, which require a very rapid brake reaction time. For these applications it is a characteristic that the AC supply for the brake rectifier is run separately to the terminal box.

The voltage relay UR with power supply interruption separates the DC circuit of the brake and thereby ensures a rapid demagnetizing of the brake.

The control system BUR achieves the shortest brake reaction and brake release reaction times without additional conductor leads requirement between the switch cabinet and brake motor and also without external contactors.

The control system BUR is available for power supplies 42V through 500V and a maximum holding current of 1 A.

The BSR and BUR engage a PG threaded conduit aperature of the terminal box. Should the standard four PG threaded conduit aperatures not be sufficient for the cabling, please consult us.

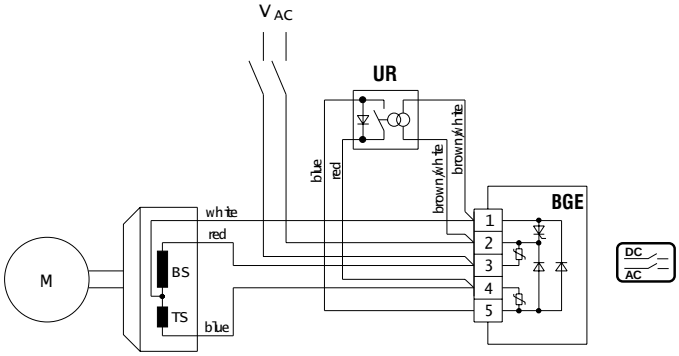

Caution:

The power supply is with separate supply leads. The connection to the terminal board of the motor is not permissible.

Mechanical Features of the Brake Rectifier and Brake Control Systems

All brake rectifiers for the BM(G) brake have the same external dimensions (except for the DIN rail mounted units). The BG and BGE units are preferably mounted in the motor terminal box, but can also be supplied for switch cabinet installation. The BMS, BME, BMH, BMP and BMK units are for DIN rail mounting.

BG, BGE, BSG Brake Rectifiers

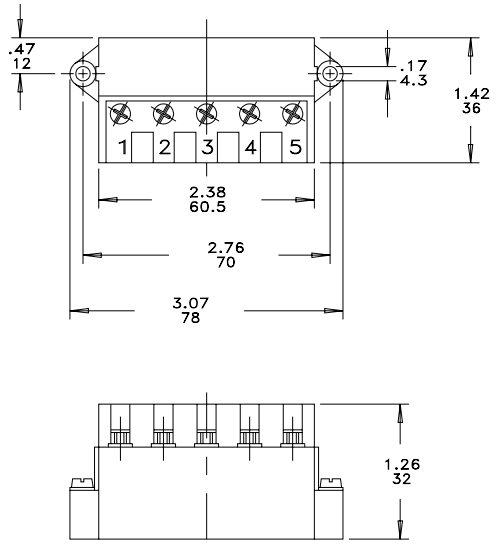

BMS, BME, BMH, BMP, BMK Brake Rectifiers

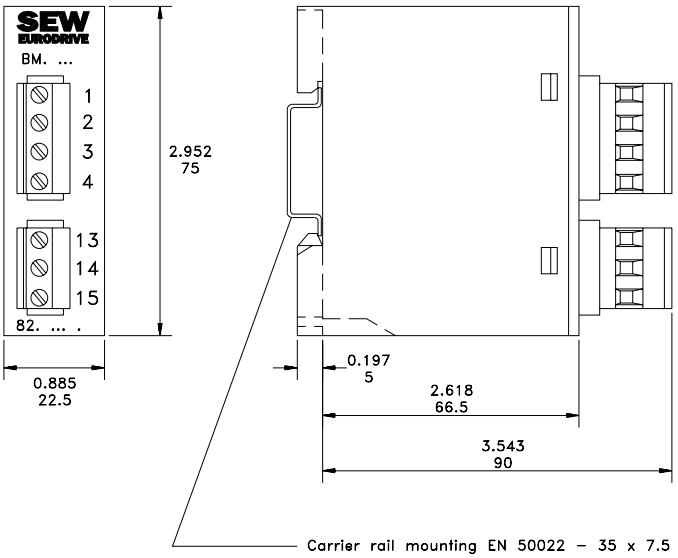
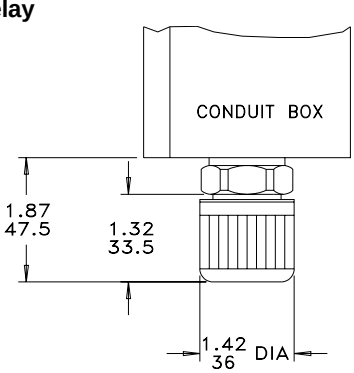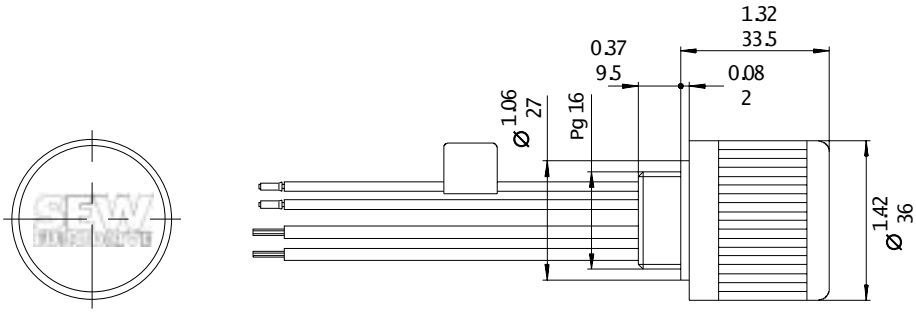
UR/SR Relay