Low Voltage connection Shunt Field

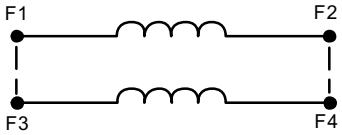

High Voltage connection Shunt Field

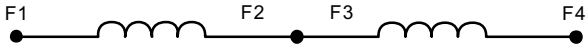

Field Reversing Series Motor

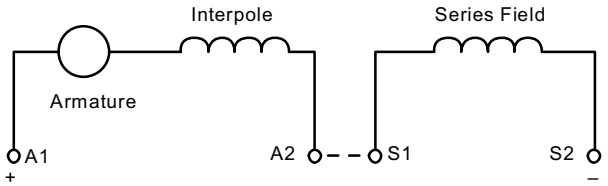

Series Motor CCW Rotation
(Facing Commutator End)

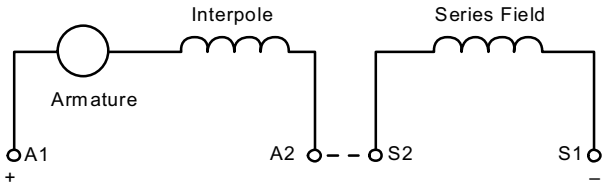

Series Motor CW Rotation
(Facing Commutator End)

Armature Reversing
Compound and Stabilized Motors

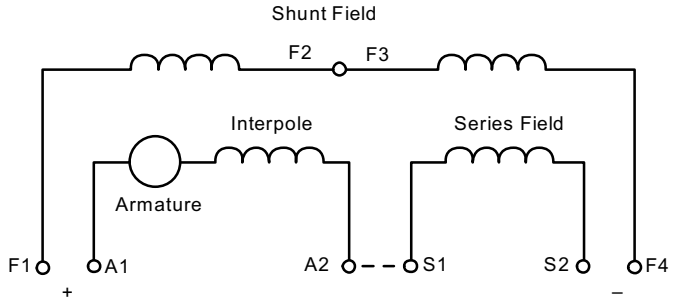

Compound or Stabilized Shunt Motor
CCW Rotation (Facing Commutator End)
High Voltage Field Connection

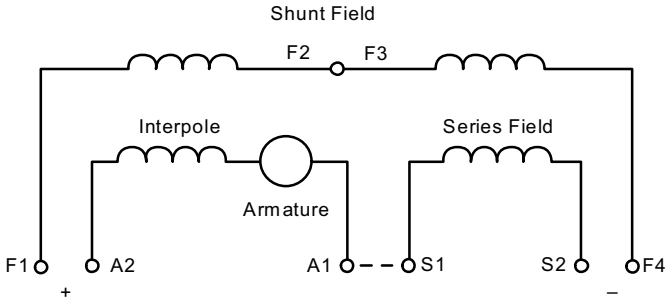

Compound or Stabilized Shunt Motor
CW Rotation (Facing Commutator End)
High Voltage Field Connection

Field Reversing Shunt Motor

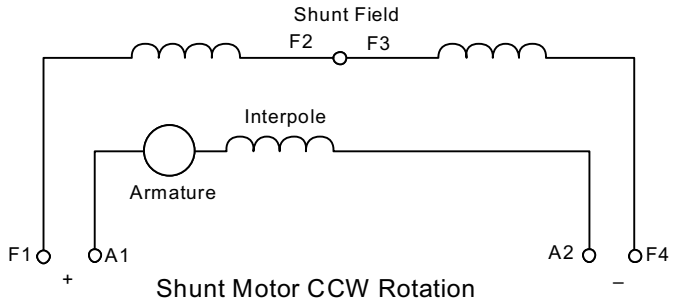

Shunt Motor CCW Rotation
(Facing Commutator End)
High Voltage Field Connection

Field Reversing Shunt Motor

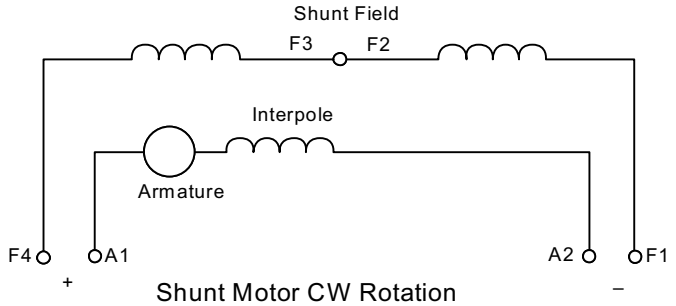

Shunt Motor CW Rotation
(Facing Commutator End)
High Voltage Field Connection

DC Generator Connection Diagram
Compound Wound Short Shunt Connection

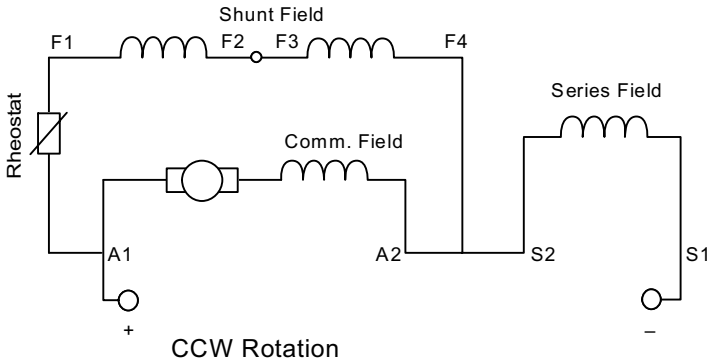

CCW Rotation
(Facing Commutator End)
For CW Rotation, Interchange Leads A1 and A2.